Cambridge Assessment International Education

Cambridge International AS & A Level

CANDIDATE NAME

CENTRE NUMBER

CANDIDATE NUMBER

9380134350

PHYSICS **9702/21**

Paper 2 AS Level Structured Questions **May/June 2021**

1 hour 15 minutes

You must answer on the question paper.

No additional materials are needed.

INSTRUCTIONS

- Answer **all** questions.
- Use a black or dark blue pen. You may use an HB pencil for any diagrams or graphs.
- Write your name, centre number and candidate number in the boxes at the top of the page.
- Write your answer to each question in the space provided.
- Do **not** use an erasable pen or correction fluid.
- Do **not** write on any bar codes.
- You may use a calculator.
- You should show all your working and use appropriate units.

INFORMATION

- The total mark for this paper is 60.
- The number of marks for each question or part question is shown in brackets [ ].

This document has **16** pages. Any blank pages are indicated.

DC (DH/CB) 198450/2
© UCLES 2021

[Turn over

Data

speed of light in free space	$c = 3.00 \times 10^{8}\,\text{m s}^{-1}$
permeability of free space	$\mu_0 = 4\pi \times 10^{-7}\,\text{H m}^{-1}$
permittivity of free space	$\varepsilon_0 = 8.85 \times 10^{-12}\,\text{F m}^{-1}$
	$(\frac{1}{4\pi\varepsilon_0} = 8.99 \times 10^{9}\,\text{m F}^{-1})$
elementary charge	$e = 1.60 \times 10^{-19}\,\text{C}$
the Planck constant	$h = 6.63 \times 10^{-34}\,\text{J s}$
unified atomic mass unit	$1\,\text{u} = 1.66 \times 10^{-27}\,\text{kg}$
rest mass of electron	$m_e = 9.11 \times 10^{-31}\,\text{kg}$
rest mass of proton	$m_p = 1.67 \times 10^{-27}\,\text{kg}$
molar gas constant	$R = 8.31\,\text{J K}^{-1}\,\text{mol}^{-1}$
the Avogadro constant	$N_A = 6.02 \times 10^{23}\,\text{mol}^{-1}$
the Boltzmann constant	$k = 1.38 \times 10^{-23}\,\text{J K}^{-1}$
gravitational constant	$G = 6.67 \times 10^{-11}\,\text{N m}^2\,\text{kg}^{-2}$
acceleration of free fall	$g = 9.81\,\text{m s}^{-2}$

© UCLES 2021

Formulae

uniformly accelerated motion	$s = ut + \frac{1}{2}at^2$ $v^2 = u^2 + 2as$
work done on/by a gas	$W = p\Delta V$
gravitational potential	$\phi = -\frac{Gm}{r}$
hydrostatic pressure	$p = \rho gh$
pressure of an ideal gas	$p = \frac{1}{3}\frac{Nm}{V}\langle c^2 \rangle$
simple harmonic motion	$a = -\omega^2 x$
velocity of particle in s.h.m.	$v = v_0 \cos \omega t$ $v = \pm \omega\sqrt{(x_0^2 - x^2)}$
Doppler effect	$f_o = \frac{f_s v}{v \pm v_s}$
electric potential	$V = \frac{Q}{4\pi\varepsilon_0 r}$
capacitors in series	$1/C = 1/C_1 + 1/C_2 + \ldots$
capacitors in parallel	$C = C_1 + C_2 + \ldots$
energy of charged capacitor	$W = \frac{1}{2}QV$
electric current	$I = Anvq$
resistors in series	$R = R_1 + R_2 + \ldots$
resistors in parallel	$1/R = 1/R_1 + 1/R_2 + \ldots$
Hall voltage	$V_H = \frac{BI}{ntq}$
alternating current/voltage	$x = x_0 \sin \omega t$
radioactive decay	$x = x_0 \exp(-\lambda t)$
decay constant	$\lambda = \frac{0.693}{t_{\frac{1}{2}}}$

© UCLES 2021

[Turn over

Answer **all** the questions in the spaces provided.

1 **(a)** Define *density*.

.....

..... [1]

(b) Fig. 1.1 shows a solid pyramid with a square base.

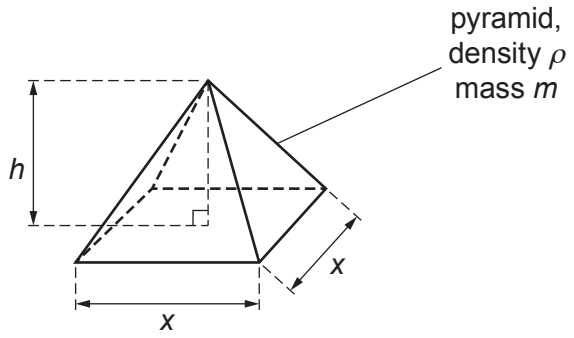

Fig. 1.1

The mass m of the pyramid is given by

$$m = \frac{1}{3}\rho h x^2$$

where ρ is the density of the material of the pyramid,
h is the height, and
x is the length of each side of the base.

Measurements are taken as shown in Table 1.1.

Table 1.1

quantity	measurement	percentage uncertainty
m	19.5 g	±2%
x	4.0 cm	±5%
h	4.8 cm	±4%

(i) Calculate the absolute uncertainty in length x.

absolute uncertainty = ... cm [1]

© UCLES 2021

(ii) The density ρ is calculated from the measurements in Table 1.1.

Determine the percentage uncertainty in the calculated value of ρ.

percentage uncertainty = ... % [2]

(c) The square base of the pyramid in **(b)** rests on the horizontal surface of a bench.

Use data from Table 1.1 to calculate the average pressure of the pyramid on the surface of the bench. The uncertainty in your answer is not required.

pressure = ... Pa [3]

[Total: 7]

2 A person uses a trolley to move suitcases at an airport. The total mass of the trolley and suitcases is 72 kg.

(a) The person pushes the trolley and suitcases along a horizontal surface with a constant speed of $1.4\,m\,s^{-1}$ and then releases the trolley. The released trolley moves in a straight line and comes to rest. Assume that a constant total resistive force of 18 N opposes the motion of the trolley and suitcases.

(i) Calculate the power required to overcome the total resistive force on the trolley and suitcases when they move with a constant speed of $1.4\,m\,s^{-1}$.

power = ... W [2]

(ii) Calculate the time taken for the trolley to come to rest after it is released.

time = ... s [3]

(b) At another place in the airport, the trolley and suitcases are on a slope, as shown in Fig. 2.1.

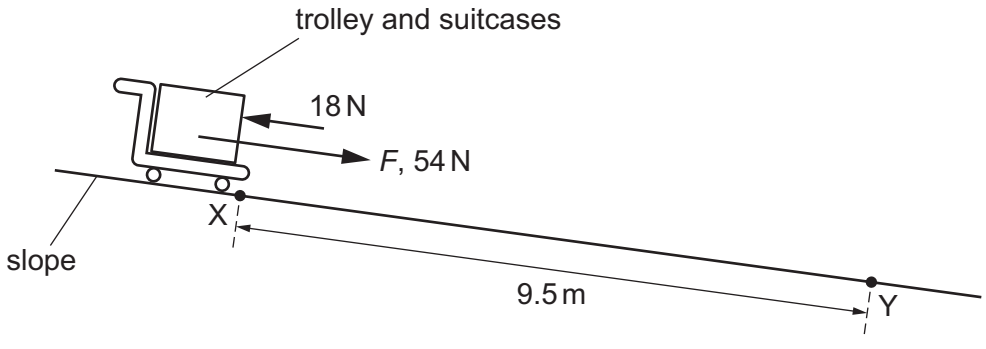

Fig. 2.1 (not to scale)

The person releases the trolley from rest at point X. The trolley moves down the slope in a straight line towards point Y. The distance along the slope between points X and Y is 9.5 m.

The component *F* of the weight of the trolley and suitcases that acts along the slope is 54 N. Assume that a constant total resistive force of 18 N opposes the motion of the trolley and suitcases.

© UCLES 2021

(i) Calculate the speed of the trolley at point Y.

speed = ... $m\,s^{-1}$ [3]

(ii) Calculate the work done by *F* for the movement of the trolley from X to Y.

work done = ... J [1]

(iii) The trolley is released at point X at time $t = 0$.

On Fig. 2.2, sketch a graph to show the variation with time *t* of the work done by *F* for the movement of the trolley from X to Y.
Numerical values of the work done and *t* are not required.

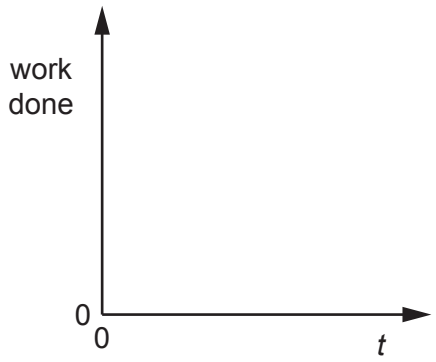

Fig. 2.2

[2]

(c) The angle of the slope in **(b)** is constant. The frictional forces acting on the wheels of the moving trolley are also constant.

Explain why, in practice, it is incorrect to assume that the total resistive force opposing the motion of the trolley and suitcases is constant as the trolley moves between X and Y.

.....

..... [1]

[Total: 12]

3 A pendulum consists of a solid sphere suspended by a string from a fixed point P, as shown in Fig. 3.1.

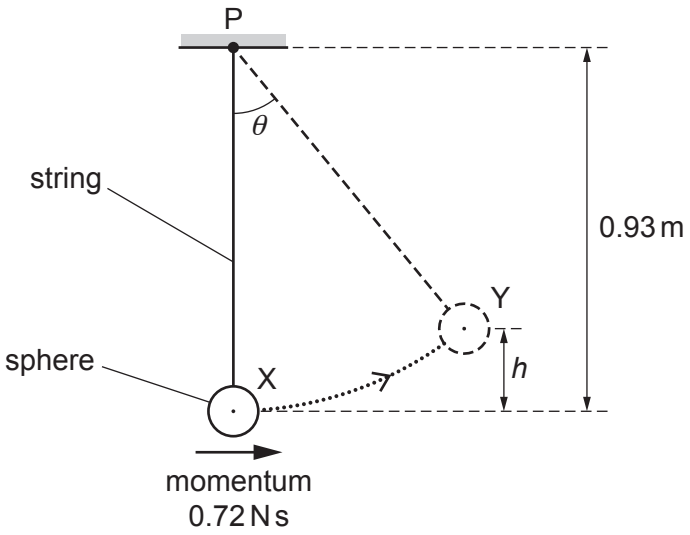

Fig. 3.1 (not to scale)

The sphere swings from side to side. At one instant the sphere is at its lowest position X, where it has kinetic energy 0.86 J and momentum 0.72 N s in a horizontal direction. A short time later the sphere is at position Y, where it is momentarily stationary at a maximum vertical height *h* above position X.

The string has a fixed length and negligible weight. Air resistance is also negligible.

(a) On Fig. 3.1, draw a solid line to represent the displacement of the centre of the sphere at position Y from position X. [1]

(b) Show that the mass of the sphere is 0.30 kg.

[3]

© UCLES 2021

(c) Calculate height h.

h = ... m [2]

(d) The distance between point P and the centre of the sphere is 0.93 m. When the sphere is at position Y, the string is at an angle θ to the vertical.

Show that θ is 47°.

[1]

(e) For the sphere at position Y, calculate the moment of its weight about point P.

moment = ... N m [2]

(f) State and explain whether the sphere is in equilibrium when it is stationary at position Y.

.....

..... [1]

[Total: 10]

4 **(a)** For a progressive wave, state what is meant by *wavelength*.

.....

..... [1]

(b) A light wave from a laser has a wavelength of 460 nm in a vacuum.

Calculate the period of the wave.

period = ... s [3]

(c) The light from the laser is incident normally on a diffraction grating.

Describe the diffraction of the light waves at the grating.

.....

.....

..... [2]

(d) A diffraction grating is used with different wavelengths of visible light. The angle θ of the **fourth**-order maximum from the zero-order (central) maximum is measured for each wavelength. The variation with wavelength λ of $\sin\theta$ is shown in Fig. 4.1.

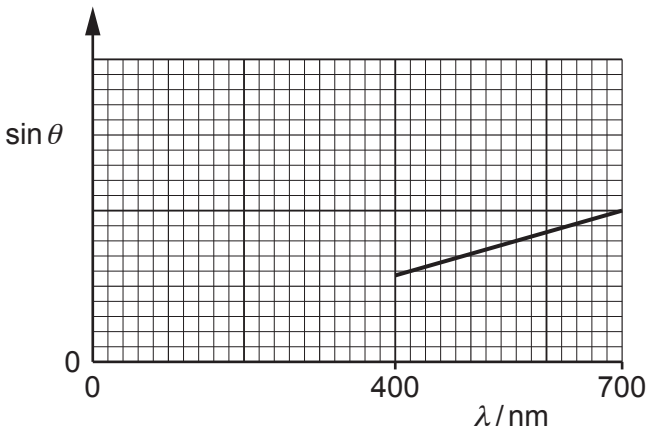

Fig. 4.1

(i) The gradient of the graph is G.

Determine an expression, in terms of G, for the distance d between the centres of two adjacent slits in the diffraction grating.

d = ... [2]

(ii) On Fig. 4.1, sketch a graph to show the results that would be obtained for the **second**-order maxima. [2]

[Total: 10]

5 **(a)** State Kirchhoff's second law.

.....

.....

..... [2]

(b) A battery has electromotive force (e.m.f.) 4.0 V and internal resistance 0.35 Ω. The battery is connected to a uniform resistance wire XY and a fixed resistor of resistance *R*, as shown in Fig. 5.1.

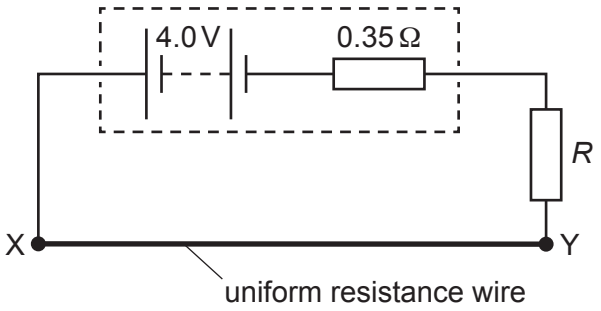

Fig. 5.1

Wire XY has resistance 0.90 Ω. The potential difference across wire XY is 1.8 V.

Calculate:

(i) the current in wire XY

current = ... A [1]

(ii) the number of free electrons that pass a point in the battery in a time of 45 s

number = ... [2]

(iii) resistance *R*.

R = ... Ω [2]

© UCLES 2021

(c) A cell of e.m.f. 1.2 V is connected to the circuit in **(b)**, as shown in Fig. 5.2.

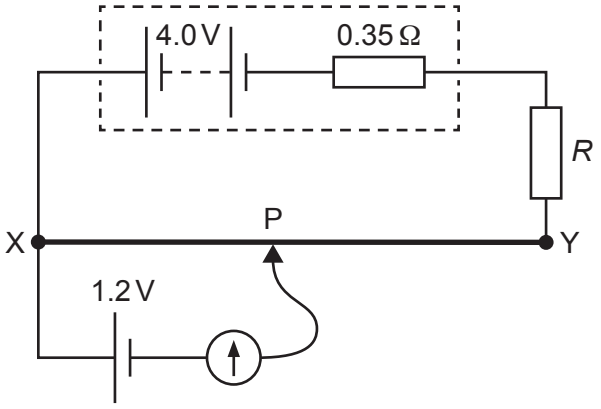

Fig. 5.2

The connection P is moved along the wire XY. The galvanometer reading is zero when distance XP is 0.30 m.

(i) Calculate the total length *L* of wire XY.

L = ... m [2]

(ii) The fixed resistor is replaced by a different fixed resistor of resistance greater than *R*.

State and explain the change, if any, that must be made to the position of P on wire XY so that the galvanometer reading is zero.

.....

.....

.....

..... [2]

[Total: 11]

6 **(a)** A proton in a nucleus decays to form a neutron and a β^+ particle.

(i) State the name of another lepton that is produced in the decay.

..... [1]

(ii) State the name of the interaction (force) that gives rise to this decay.

..... [1]

(iii) State which of the three particles (proton, neutron or β^+ particle) has the largest ratio of charge to mass.

..... [1]

(iv) Use the quark model to show that the charge on the proton is $+e$, where e is the elementary charge.

[2]

(v) The quark composition of the proton is changed during the decay.

Describe the change to the quark composition.

.....

..... [1]

(b) A nucleus X ($^{12}_{6}X$) and a nucleus Y ($^{16}_{8}Y$) are accelerated by the same uniform electric field.

(i) Determine the ratio

$$\frac{\text{electric force acting on nucleus X}}{\text{electric force acting on nucleus Y}}.$$

ratio = ... [2]

(ii) Determine the ratio

$$\frac{\text{acceleration of nucleus X due to the field}}{\text{acceleration of nucleus Y due to the field}}.$$

ratio = ... [1]

(iii) Nucleus X is at rest in the uniform electric field at time $t = 0$.

The field causes nucleus X to accelerate so that it moves through the field.

On Fig. 6.1, sketch the variation with time t of the acceleration a of nucleus X due to the field.

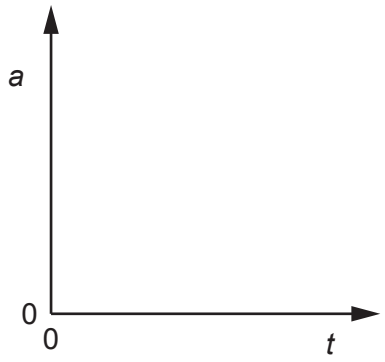

Fig. 6.1

[1]

[Total: 10]

© UCLES 2021

BLANK PAGE

Permission to reproduce items where third-party owned material protected by copyright is included has been sought and cleared where possible. Every reasonable effort has been made by the publisher (UCLES) to trace copyright holders, but if any items requiring clearance have unwittingly been included, the publisher will be pleased to make amends at the earliest possible opportunity.

To avoid the issue of disclosure of answer-related information to candidates, all copyright acknowledgements are reproduced online in the Cambridge Assessment International Education Copyright Acknowledgements Booklet. This is produced for each series of examinations and is freely available to download at www.cambridgeinternational.org after the live examination series.

Cambridge Assessment International Education is part of the Cambridge Assessment Group. Cambridge Assessment is the brand name of the University of Cambridge Local Examinations Syndicate (UCLES), which itself is a department of the University of Cambridge.

© UCLES 2021